Work Order ID 74519

Monday, October 03, 2011 4:01:34 PM

Item ID: D3407-043
Revision ID:
Item Name: Tow Ring
Start Date: 9/30/2011 **Start Qty:** 20.00
Required Date: 10/14/2011 **Req'd Qty:** 20.00
Reference:

22 lpl

Accept **Setup** **Start** **Stop**

Cust Item ID:
Customer:

Run **Start** **Stop**

Approvals: **Process Plan:** M.L.J **Date:** 11/10/03 **Tooling:** _____ **Date:** _____
QC: _____ **Date:** _____ **SPC (Y/N):** _____ **Date:** _____

Sequence ID/ Work Center ID	Operation Description	Set Up/ Run Hours	Tool ID	Tool #	Plan Code	Accept Qty	Reject Qty	Reject Number	Insp. Stamp
Draw Nbr	**Revision Nbr**								
D3407	Rev E								
100 Large Fab	Large Fab	0.00				22x	Ø		
	Memo	0.00							
	Weld D3407-3/-5 using welding rod TIG174 as per Dwg D3407 & QSI 004□A/R TIG174 ROD Batch: jM101972.								
110 QC Quality Control	QC9- Inspect visual per QSI004- Fusion Welds	0.00							
	Memo	0.00							
120 QC Quality Control	QC5- Inspect part completeness to step on W/O	0.00				counted 22			
	Memo	0.00							

11.10.26

11.10.26

Sw 110/27

Dart Aerospace Ltd

WORK ORDER CHANGES

W/O:							
DATE	STEP	PROCEDURE CHANGE	By	Date	Qty	Approval Chief Eng / Prod Mgr	Approval QC Inspector

Part No: _____ PAR #: _____ Fault Category: _____ NCR: Yes No DQA: _____ Date: _____

Resolution: _____ Disposition: _____ QA: N/C Closed: _____ Date: _____

WORK ORDER NON-CONFORMANCE (NCR)

NCR:								
			Corrective Action Section B			Verification Section C	Approval Chief Eng	Approval QC Inspector
DATE	STEP	Description of NC Section A	Initial Chief Eng	Action Description Chief Eng	Sign & Date			

NOTE: Date & initial all entries

H:\fFORMS\Quality Assurance\approved QA\NCRWO RevE

Work Order ID 74519

Monday, October 03, 2011 4:01:34 PM

Item ID: D3407-043 **Accept** **Setup Start** **Stop**

Revision ID:

Item Name: Tow Ring

Start Date: 9/30/2011 **Start Qty:** 20.00 **Cust Item ID:**

Required Date: 10/14/2011 **Req'd Qty:** 20.00 **Customer:**

Reference:

Run Start **Stop**

Approvals: **Process Plan:** _____ **Date:** _____ **Tooling:** _____ **Date:** _____

QC: _____ **Date:** _____ **SPC (Y/N):** _____ **Date:** _____

Sequence ID/ Work Center ID	Operation Description	Set Up/ Run Hours	Tool ID	Tool #	Plan Code	Accept Qty	Reject Qty	Reject Number	Insp. Stamp
130	White Gloss(Ref:4.3.5.1) per QSI005 4.3-Alum	0.00							
Powdercoat									
Powder Coating	**Memo**	0.00							
	Mask Threaded Section ☐START TIME: 7:15 ☐OVEN TEMPERATURE: 400°F ☐FINISH TIME: 7:45								
140	QC3- Inspect Part Finish	0.00							
QC	**Memo**	0.00							
Quality Control									
150	Identify as per dwg & Stock Location: 4B3	0.00							
Packaging	**Memo**	0.00							
Packaging									

22X ø m 11/10/31

m 117745

22 ø M 11/10/31
counted

11/11/1 8 22

Dart Aerospace Ltd

WORK ORDER CHANGES

W/O:							
DATE	STEP	PROCEDURE CHANGE	By	Date	Qty	Approval Chief Eng / Prod Mgr	Approval QC Inspector

Part No: _____ PAR #: _____ Fault Category: _____ NCR: Yes No DQA: _____ Date: _____

Resolution: _____ Disposition: _____ QA: N/C Closed: _____ Date: _____

WORK ORDER NON-CONFORMANCE (NCR)

NCR:								
			Corrective Action Section B					
DATE	STEP	Description of NC Section A	Initial Chief Eng	Action Description Chief Eng	Sign & Date	Verification Section C	Approval Chief Eng	Approval QC Inspector

NOTE: Date & initial all entries

H:\fFORMS\Quality Assurance\approved QA\NCRWO RevE

Work Order ID 74519

Monday, October 03, 2011 4:01:34 PM

Item ID: D3407-043 **Accept** **Setup Start**

Revision ID:

Item Name: Tow Ring **Stop**

Start Date: 9/30/2011 **Start Qty:** 20.00 **Cust Item ID:**

Required Date: 10/14/2011 **Req'd Qty:** 20.00 **Customer:**

Reference:

Run Start

Approvals: **Process Plan:** _____ **Date:** _____ **Tooling:** _____ **Date:** _____

Stop

QC: _____ **Date:** _____ **SPC (Y/N):** _____ **Date:** _____

Sequence ID/ Work Center ID	Operation Description	Set Up/ Run Hours	Tool ID	Tool #	Plan Code	Accept Qty	Reject Qty	Reject Number	Insp. Stamp
160	QC21- Final Inspection - Work Order Release	0.00						11/11/01	
QC	Memo	0.00							
Quality Control									

MF 11-11-01

Dart Aerospace Ltd

WORK ORDER CHANGES

W/O:							
DATE	STEP	PROCEDURE CHANGE	By	Date	Qty	Approval Chief Eng / Prod Mgr	Approval QC Inspector

Part No: _____ **PAR #:** _____ **Fault Category:** _____ **NCR:** Yes No **DQA:** _____ **Date:** _____

Resolution: _____ **Disposition:** _____ **QA: N/C Closed:** _____ **Date:** _____

WORK ORDER NON-CONFORMANCE (NCR)

NCR:								
			Corrective Action Section B					
DATE	STEP	Description of NC Section A	Initial Chief Eng	Action Description Chief Eng	Sign & Date	Verification Section C	Approval Chief Eng	Approval QC Inspector

NOTE: Date & initial all entries

H:\fFORMS\Quality Assurance\approved QA\NCRWO RevE

Picklist Print

Monday, October 03, 2011 4:01:39 PM

Work Order ID: 74519

Parent Item: D3407-043

Parent Item Name: Tow Ring

Start Date: 9/30/2011 **Required Date:** 10/14/2011

Start Qty: 20.00 **Required Qty:** 20.00

Comments: IPP Rev:A□05.10.14□New issue□KJ/EC
IPP Rev:B 08-09-09 revE as per dwg DD verified by:EC

Component Item ID/ Item Name	Replacement Item ID	Mfg/ Purch	Bin Item	Primary Location	Last Location	Route Seq ID	Unit of Measure	Qty on Hand	Qty per Kit	Total Qty	Qty Issued	Date Issued	Status
D3407-3 Stem		Manufactured	No			100	Each	22.0000	1	20			
				Location		**Loc Qty**		**Loc Code**					
				WA		22							
					74154	22							
D3407-5 Ring		Manufactured	No			100	Each	5.0000	1	20			
				Location		**Loc Qty**		**Loc Code**					
				WA		5							
					73336	5							

11-10-26

22

11-10-26

B74155 → 22

Dart Aerospace Ltd

WORK ORDER CHANGES

W/O:							
DATE	STEP	PROCEDURE CHANGE	By	Date	Qty	Approval Chief Eng / Prod Mgr	Approval QC Inspector

Part No: _____ PAR #: _____ Fault Category: _____ NCR: Yes No DQA: _____ Date: _____

Resolution: _____ Disposition: _____ QA: N/C Closed: _____ Date: _____

WORK ORDER NON-CONFORMANCE (NCR)

NCR:								
			Corrective Action Section B					
DATE	STEP	Description of NC Section A	Initial Chief Eng	Action Description Chief Eng	Sign & Date	Verification Section C	Approval Chief Eng	Approval QC Inspector

NOTE: Date & initial all entries

H:\fFORMS\Quality Assurance\approved QA\NCRWO RevE

QTY -041	QTY -043	QTY -045	PART NUMBER	DESCRIPTION
X			D3407-041	TOW RING
	X		D3407-043	TOW RING
		X	D3407-045	TOW RING
1			D3407-1	STEM
	1		D3407-3	STEM
1	1	1	D3407-5	RING
		1	D3407-7	STEM

SHOP COPY
RETURN TO
ENGINEERING
UNCONTROLLED COPY
SUBJECT TO AMENDMENT
WITHOUT NOTICE
WORK ORDER
NO. 74519 M.L.J
11/10/03

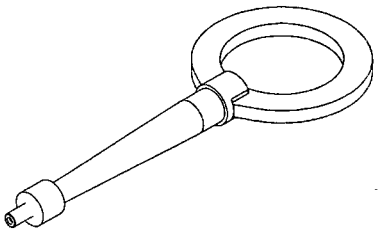

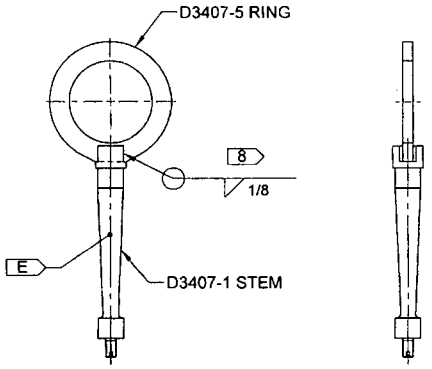

D3407-041 TOW RING

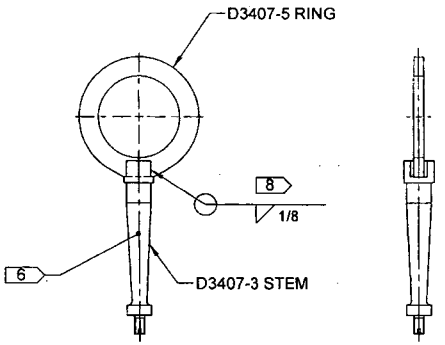

D3407-043 TOW RING

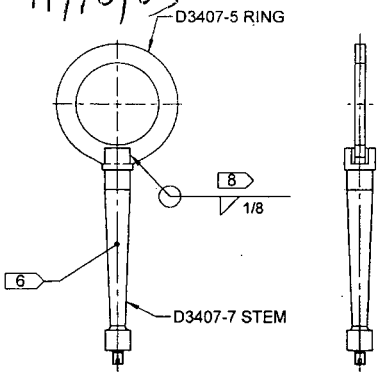

D3407-045 TOW RING E

RELEASED 08.08.01

REV.	DESCRIPTION	BY	DATE
E	ADD D3407-045 (ZN B2-1, D8-1); ADD D3407-7 (ZN B6-5); REVISED NOTE 6 TO ADD IDENTIFICATION (ZN A5-1); REASON: PRODUCTION FACILITY	PH	08.07.23
D	D3407-1/-3 SLOT WAS ROUND NOW FLAT FOR ASSEMBLY WITH D3407-5 (ZN C2-2, C2-3); D3407-5 WAS ROUND NOW FLAT ON ONE END FOR ASSEMBLY WITH D3407-1/-3 (ZN B6-4); REASON: PRODUCTION FACILITY	PH	08.04.07
C	-1/-3 LONGER FOR FIT W/WASHER	CP	05.09.09
B	UPDATE DIAMETER, THREAD CLASS ADDED	CP	05.06.17
A	NEW ISSUE	CP	05.03.16

NOTES:
1) MATERIAL: N/A
2) FINISH: POWDER COAT WHITE (4.3.5.2) PER DART QSI 005 4.3 (EXCEPT THREADS)
3) TOLERANCES: PER DART QSI 018 UNLESS OTHERWISE NOTED
4) UNITS: INCHES UNLESS OTHERWISE NOTED
5) BREAK SHARP EDGES: N/A
6) IDENTIFICATION: IDENTIFY WITH DART P/N "D3407-XXX" USING BLACK FINE POINT PERMANENT INK MARKER E
7) WEIGHT: D3407-041 - 0.60 lbs, D3407-043 - 0.53 lbs, D3407-045 - 0.61 lbs
8) WELD PER DART QSI 004 ON ALL EDGES BETWEEN STEM AND RING

DESIGN		DART AEROSPACE USA, INC. PORT HADLOCK, WA
DRAWN		
CHECKED		DRAWING NO. D3407 — REV. E — SHEET 1 OF 5
MFG. APPR.		
APPROVED		TITLE TOW RING — SCALE NTS
DE APPR.		
DATE	08.07.23	

Dart Aerospace Ltd

WORK ORDER CHANGES

W/O:							
DATE	STEP	PROCEDURE CHANGE	By	Date	Qty	Approval Chief Eng / Prod Mgr	Approval QC Inspector

Part No: _____ **PAR #:** _____ **Fault Category:** _____ **NCR:** Yes No **DQA:** _____ **Date:** _____

Resolution: _____ **Disposition:** _____ **QA: N/C Closed:** _____ **Date:** _____

WORK ORDER NON-CONFORMANCE (NCR)

NCR:								
			Corrective Action Section B					
DATE	STEP	Description of NC Section A	Initial Chief Eng	Action Description Chief Eng	Sign & Date	Verification Section C	Approval Chief Eng	Approval QC Inspector

NOTE: Date & initial all entries

H:\fFORMS\Quality Assurance\approved QA\NCRWO RevE

74519

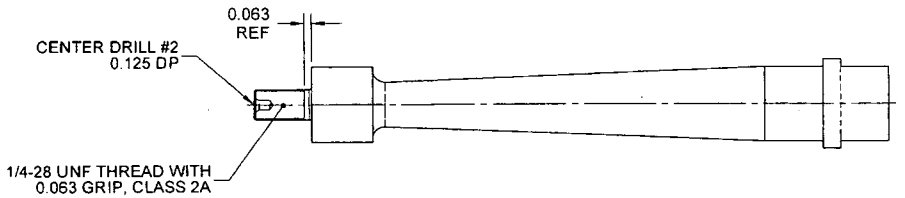

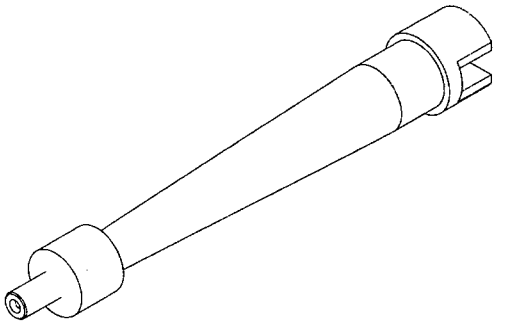

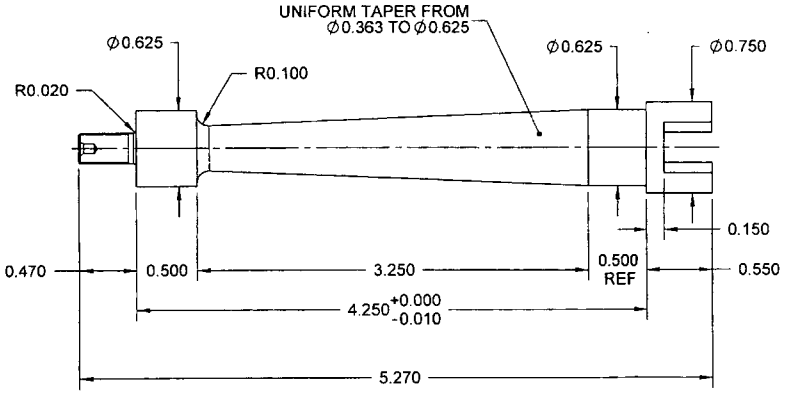

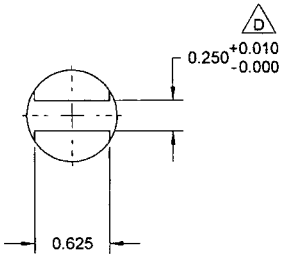

D3407-1 STEM

RELEASED
08-09-01

NOTES:
1) MATERIAL: 17-4 PH SS ROUND BAR PER AMS 5643 (REF. DART SPEC M17-4-R)
2) FINISH: NONE
3) TOLERANCES: PER DART QSI 018 UNLESS OTHERWISE NOTED
4) UNITS: INCHES UNLESS OTHERWISE NOTED
5) BREAK SHARP EDGES: MACHINE ALL INSIDE EDGES WITH A 0.010 RADIUS
6) IDENTIFICATION: N/A
7) WEIGHT: 0.33 lbs

DESIGN		DART AEROSPACE USA, INC. PORT HADLOCK, WA
DRAWN		
CHECKED		DRAWING NO. D3407 — REV. E — SHEET 2 OF 5
MFG. APPR.		
APPROVED		TITLE: TOW RING — SCALE: NTS
DE APPR.		
DATE	08.07.23	

Dart Aerospace Ltd

WORK ORDER CHANGES

W/O:							
DATE	STEP	PROCEDURE CHANGE	By	Date	Qty	Approval Chief Eng / Prod Mgr	Approval QC Inspector

Part No: _____ PAR #: _____ Fault Category: _____ NCR: Yes No DQA: _____ Date: _____

Resolution: _____ Disposition: _____ QA: N/C Closed: _____ Date: _____

WORK ORDER NON-CONFORMANCE (NCR)

NCR:								
			Corrective Action Section B					
DATE	STEP	Description of NC Section A	Initial Chief Eng	Action Description Chief Eng	Sign & Date	Verification Section C	Approval Chief Eng	Approval QC Inspector

NOTE: Date & initial all entries

H:\fFORMS\Quality Assurance\approved QA\NCRWO RevE

74519

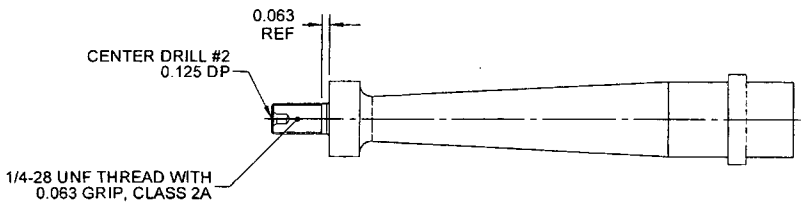

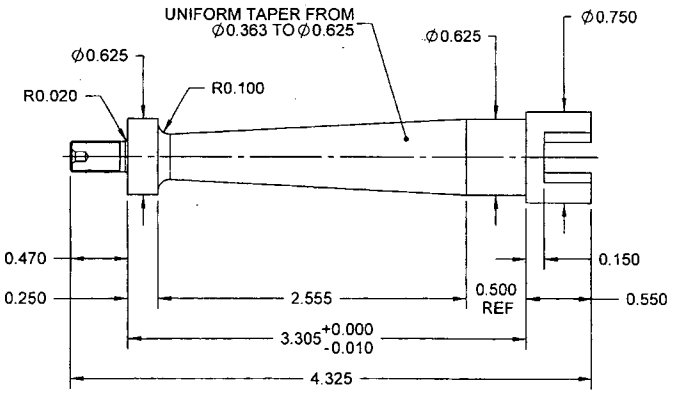

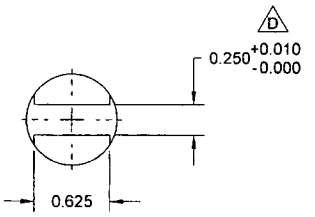

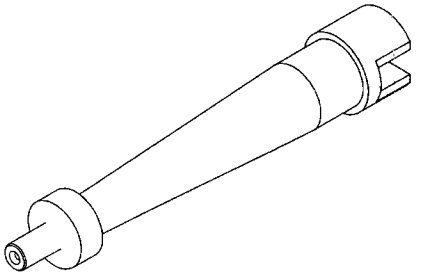

D3407-3 STEM

RELEASED 08.08.01

NOTES:
1) MATERIAL: 17-4 PH SS ROUND BAR PER AMS 5643 (REF. DART SPEC M17-4-R)
2) FINISH: NONE
3) TOLERANCES: PER DART QSI 018 UNLESS OTHERWISE NOTED
4) UNITS: INCHES UNLESS OTHERWISE NOTED
5) BREAK SHARP EDGES: MACHINE ALL INSIDE EDGES WITH A 0.010 RADIUS
6) IDENTIFICATION: N/A
7) WEIGHT: 0.27 lbs

DESIGN		DART AEROSPACE USA, INC. PORT HADLOCK, WA
DRAWN		
CHECKED		DRAWING NO. D3407 — REV. E — SHEET 3 OF 5
MFG. APPR.		
APPROVED		TITLE: TOW RING — SCALE: NTS
DE APPR.		
DATE	08.07.23	

Dart Aerospace Ltd

WORK ORDER CHANGES

W/O:							
DATE	STEP	PROCEDURE CHANGE	By	Date	Qty	Approval Chief Eng / Prod Mgr	Approval QC Inspector

Part No: _____ **PAR #:** _____ **Fault Category:** _____ **NCR:** Yes No **DQA:** _____ **Date:** _____

Resolution: _____ **Disposition:** _____ **QA: N/C Closed:** _____ **Date:** _____

WORK ORDER NON-CONFORMANCE (NCR)

NCR:								
			Corrective Action Section B					
DATE	STEP	Description of NC Section A	Initial Chief Eng	Action Description Chief Eng	Sign & Date	Verification Section C	Approval Chief Eng	Approval QC Inspector

NOTE: Date & initial all entries

H:\fFORMS\Quality Assurance\approved QA\NCRWO RevE

74519

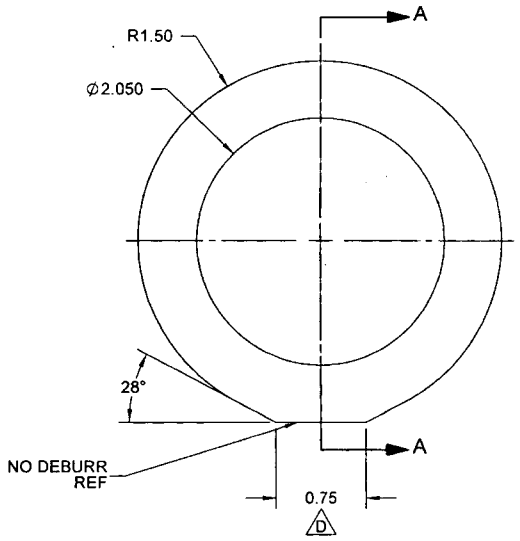

D3407-5 RING

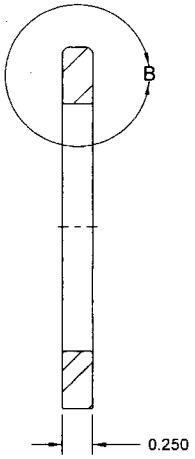

SECTION A-A

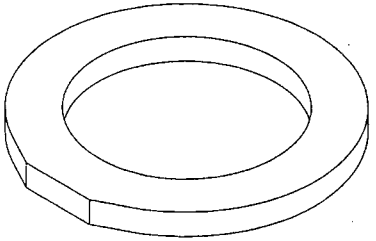

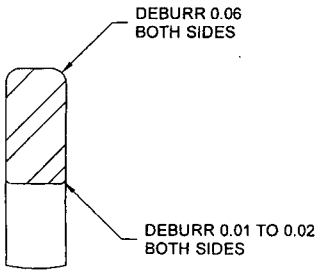

DETAIL B
SCALE 2X

RELEASED
08-08-2023

NOTES:
1) MATERIAL: 17-4 PH SS BAR PER AMS 5604/5643 (REF. DART SPEC M17-4-B)
2) FINISH: NONE
3) TOLERANCES: PER DART QSI 018 UNLESS OTHERWISE NOTED
4) UNITS: INCHES UNLESS OTHERWISE NOTED
5) BREAK SHARP EDGES: N/A
6) IDENTIFICATION: N/A
7) WEIGHT: 0.27 lbs

DESIGN		**DART AEROSPACE USA, INC.** PORT HADLOCK, WA
DRAWN		
CHECKED		DRAWING NO. D3407 — REV. E — SHEET 4 OF 5
MFG. APPR.		
APPROVED		TITLE: TOW RING — SCALE: NTS
DE APPR.		
DATE	08.07.23	

Dart Aerospace Ltd

WORK ORDER CHANGES

W/O:

DATE	STEP	PROCEDURE CHANGE	By	Date	Qty	Approval Chief Eng / Prod Mgr	Approval QC Inspector

Part No: _____ **PAR #:** _____ **Fault Category:** _____ **NCR:** Yes No **DQA:** _____ **Date:** _____

Resolution: _____ **Disposition:** _____ **QA: N/C Closed:** _____ **Date:** _____

WORK ORDER NON-CONFORMANCE (NCR)

NCR:

DATE	STEP	Description of NC Section A	Corrective Action Section B			Verification Section C	Approval Chief Eng	Approval QC Inspector
			Initial Chief Eng	Action Description Chief Eng	Sign & Date			

NOTE: Date & initial all entries

H:\fFORMS\Quality Assurance\approved QA\NCRWO RevE

74519

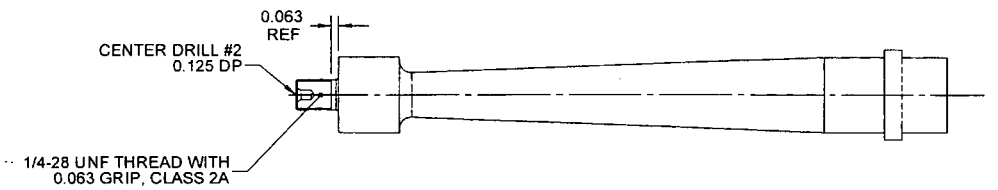

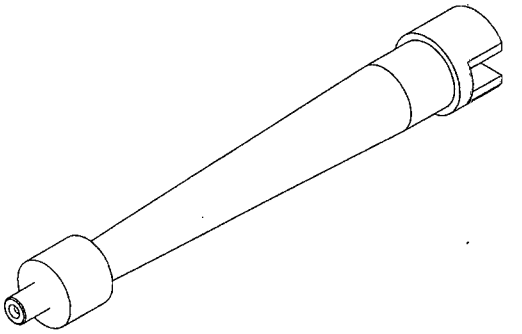

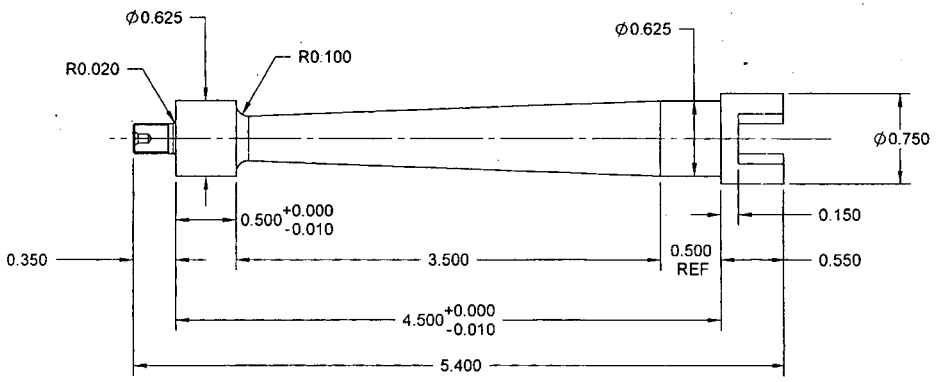

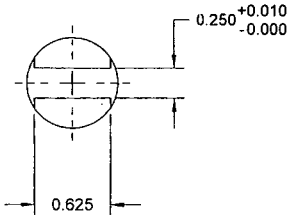

E **D3407-7 STEM**

RELEASED 08.04.01 NAP

NOTES:
1) MATERIAL: 17-4 PH SS ROUND BAR PER AMS 5643 (REF. DART SPEC M17-4-R)
2) FINISH: NONE
3) TOLERANCES: PER DART QSI 018 UNLESS OTHERWISE NOTED
4) UNITS: INCHES UNLESS OTHERWISE NOTED
5) BREAK SHARP EDGES: MACHINE ALL INSIDE EDGES WITH A 0.010 RADIUS
6) IDENTIFICATION: N/A
7) WEIGHT: 0.34 lbs

DESIGN	AJS	**DART AEROSPACE USA, INC.** PORT HADLOCK, WA
DRAWN		
CHECKED		DRAWING NO. D3407 — REV. E — SHEET 5 OF 5
MFG. APPR.		
APPROVED		TITLE: TOW RING — SCALE: NTS
DE APPR.		
DATE	08.07.23	

Dart Aerospace Ltd

WORK ORDER CHANGES

W/O:

DATE	STEP	PROCEDURE CHANGE	By	Date	Qty	Approval Chief Eng / Prod Mgr	Approval QC Inspector

Part No: _____ **PAR #:** _____ **Fault Category:** _____ **NCR:** Yes No **DQA:** _____ **Date:** _____

Resolution: _____ **Disposition:** _____ **QA: N/C Closed:** _____ **Date:** _____

WORK ORDER NON-CONFORMANCE (NCR)

NCR:

DATE	STEP	Description of NC - Section A	Corrective Action Section B			Verification Section C	Approval Chief Eng	Approval QC Inspector
			Initial Chief Eng	Action Description Chief Eng	Sign & Date			

NOTE: Date & initial all entries

H:\fFORMS\Quality Assurance\approved QA\NCRWO RevE